50	51	52	53	54	55
× 2 K3-02298 *M4 x 8*	× 3 K3-02059 *M6 x 16*	× 4 K3-04026 *M6 (ϕ 6,4)*	× 4 K3-03026 *M6*	× 1 K3-05016 *M6 x 30*	× 1 K3-04540 *ϕ 40 / ϕ 6*

56

× 3
R1-63431
M6 x 30

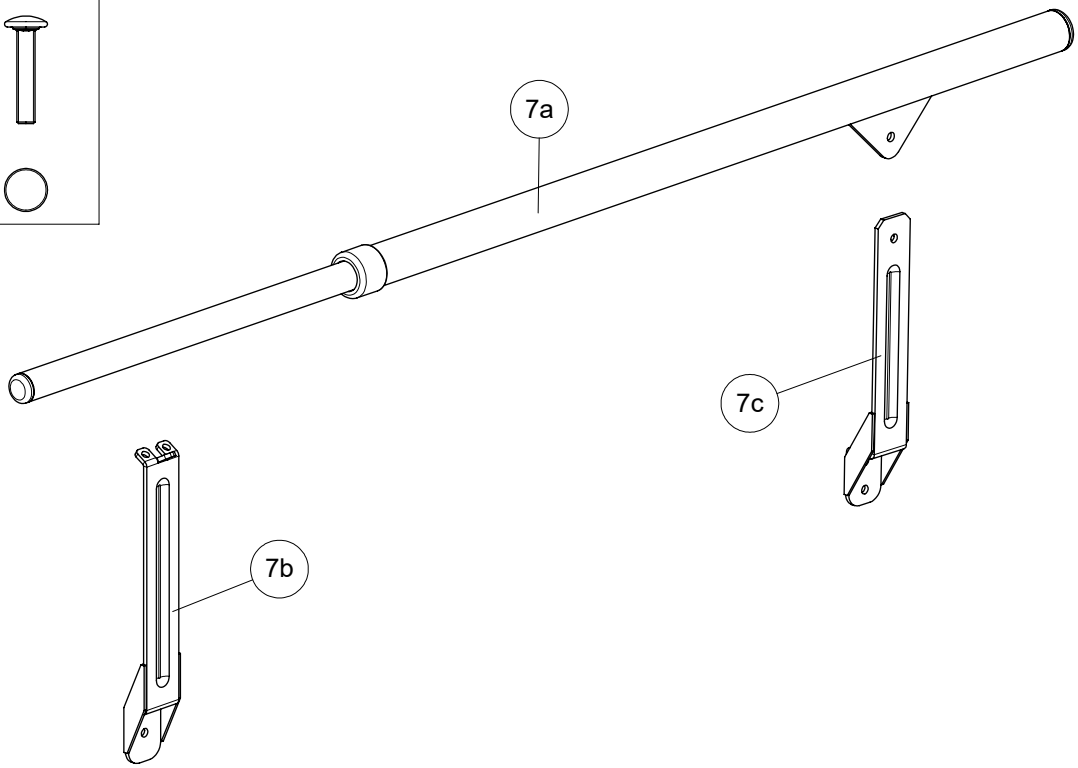

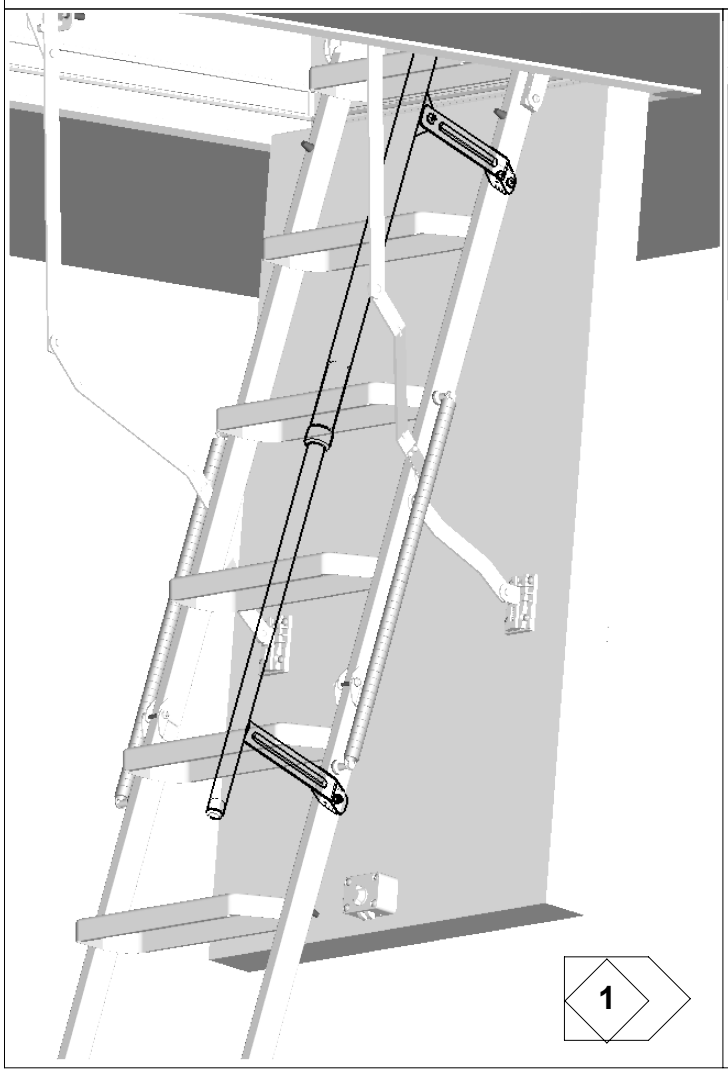

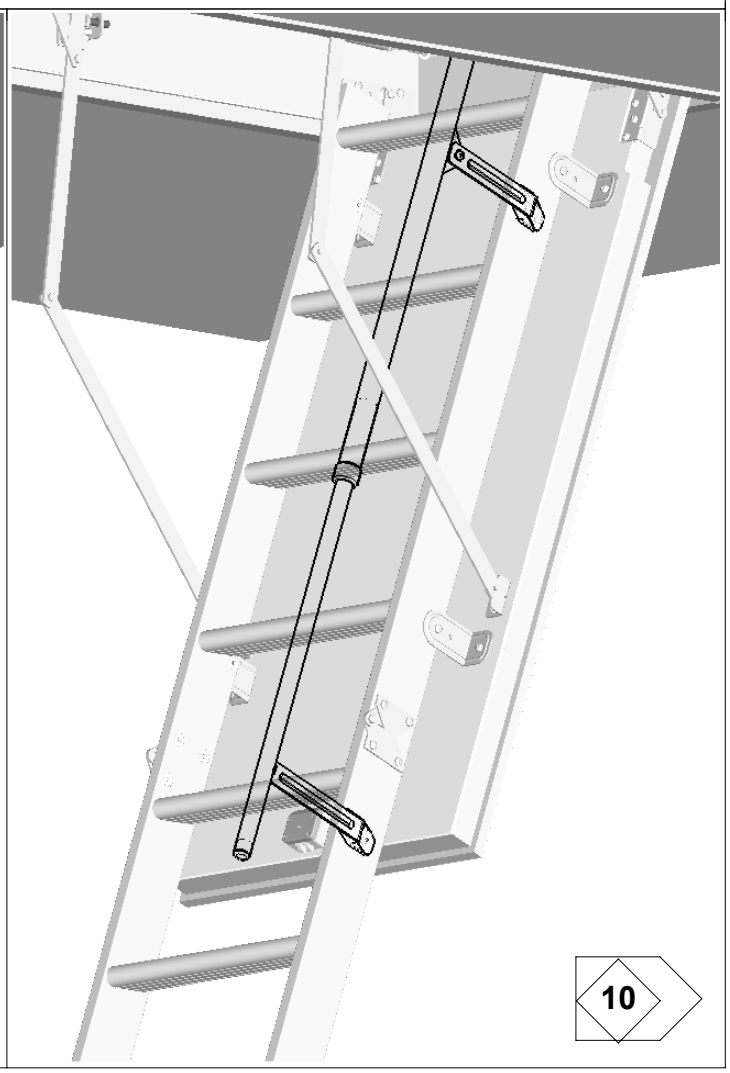

1

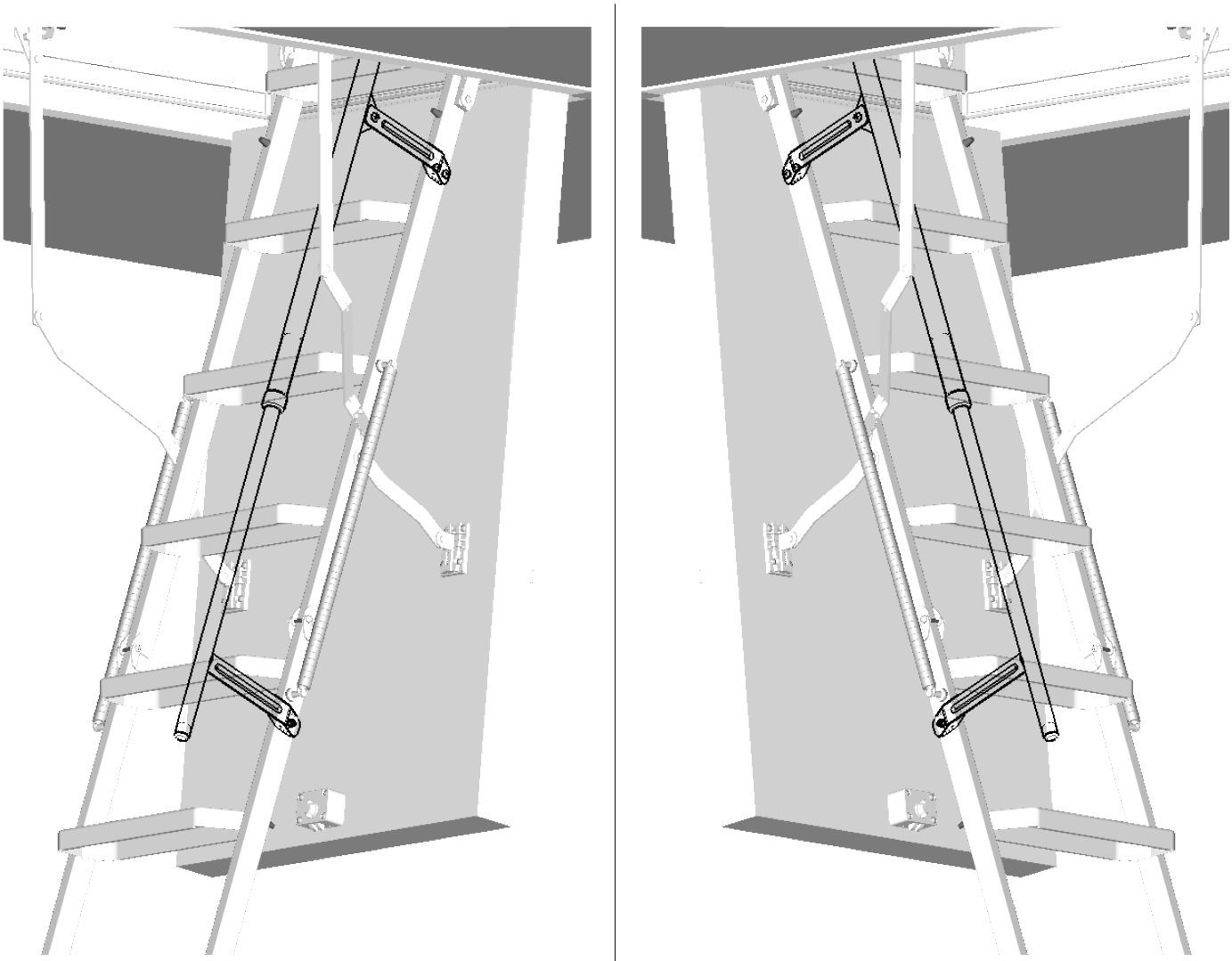

2

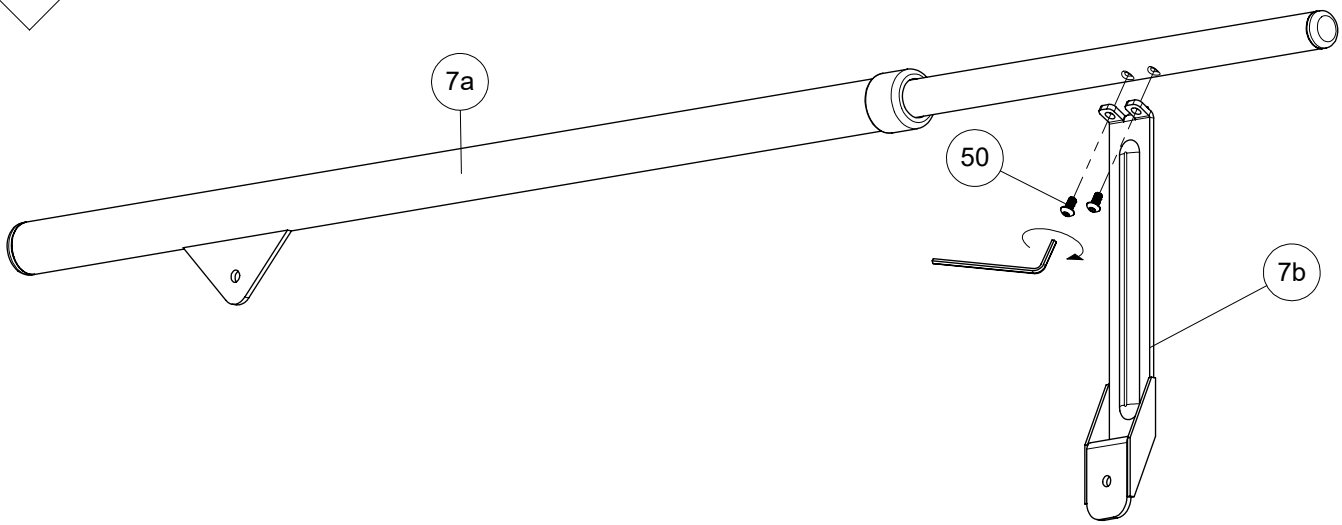

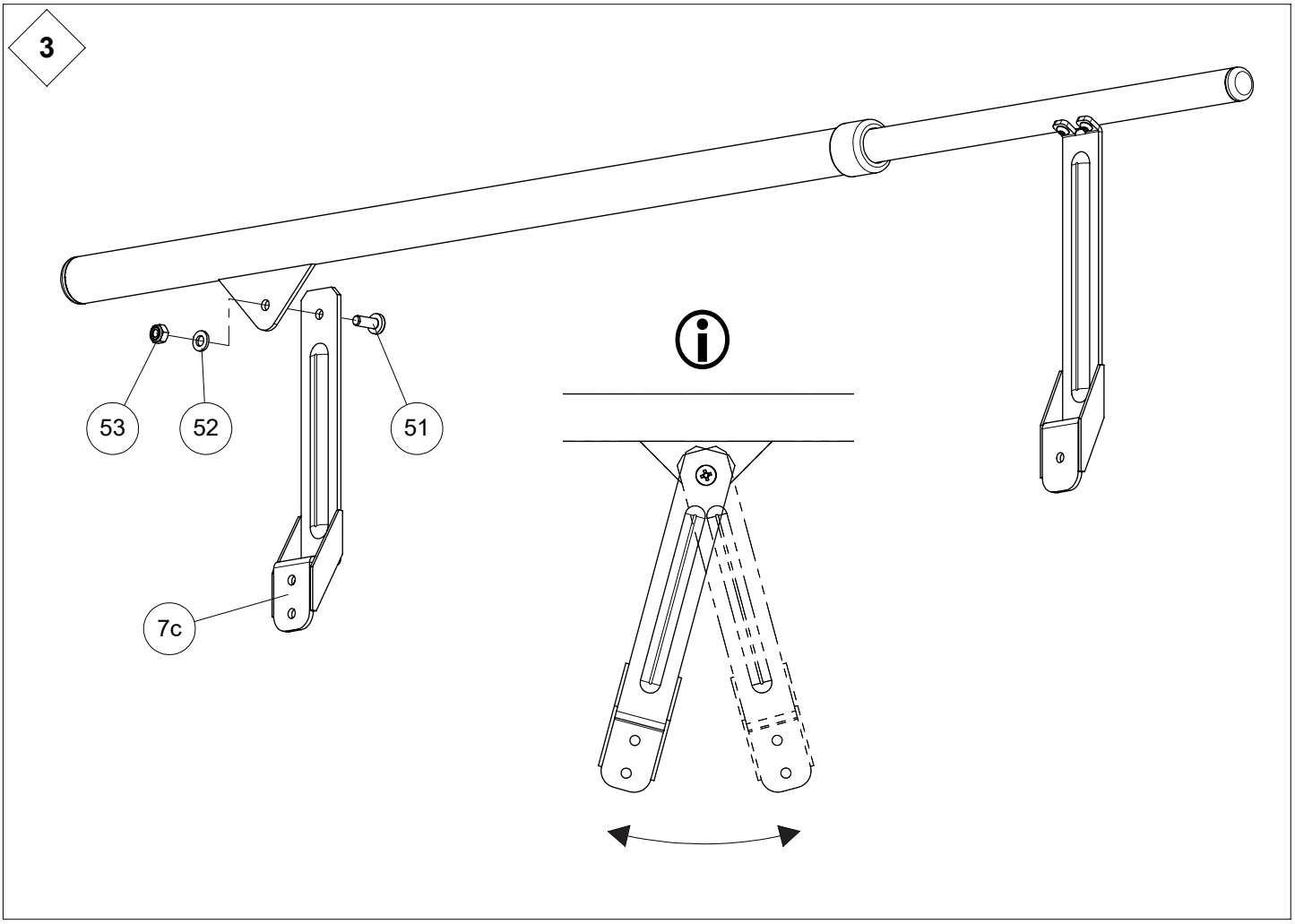
3
53
52
51
7c

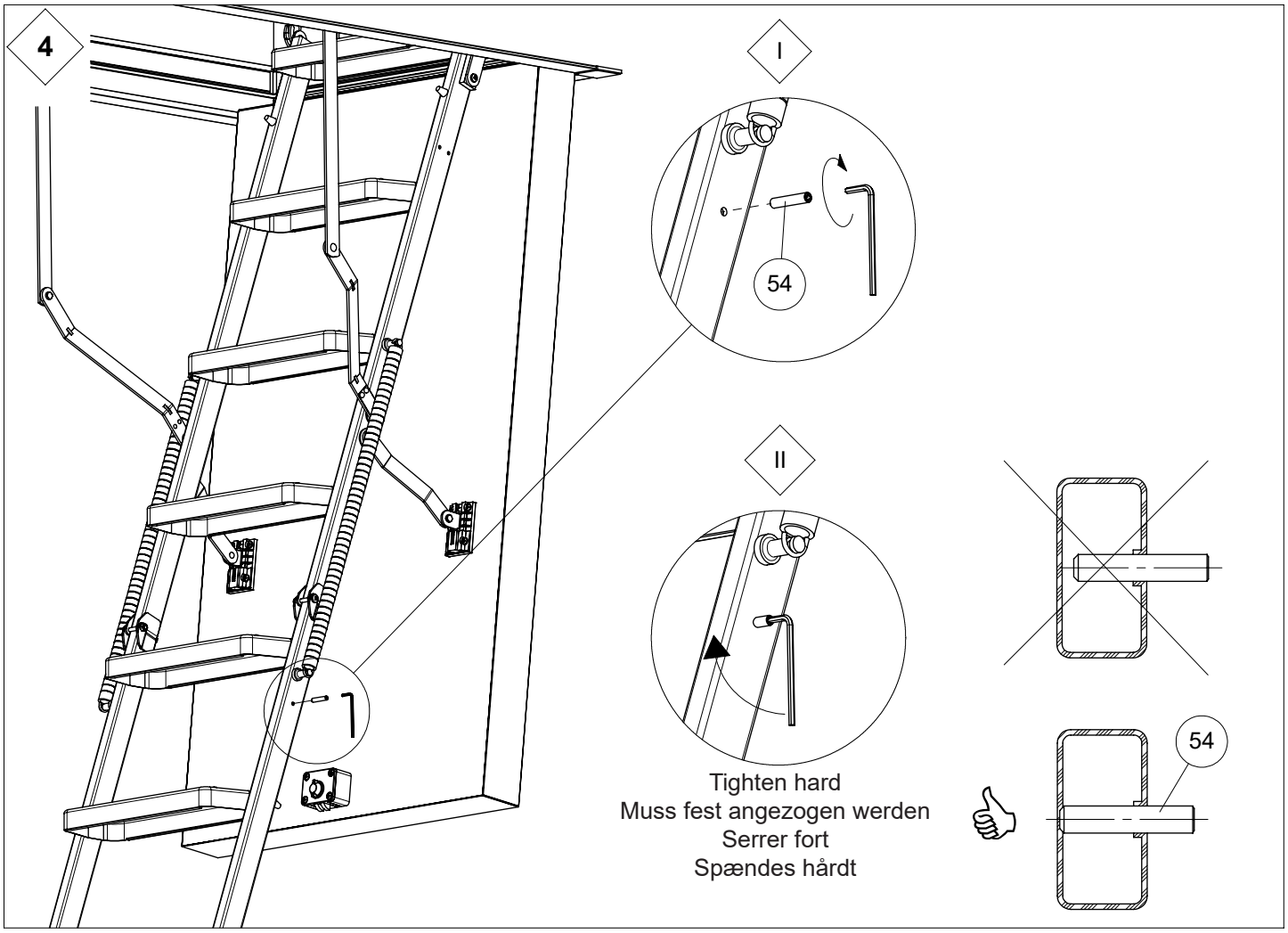
4
I
54
II
Tighten hard
Muss fest angezogen werden
Serrer fort
Spændes hårdt
54

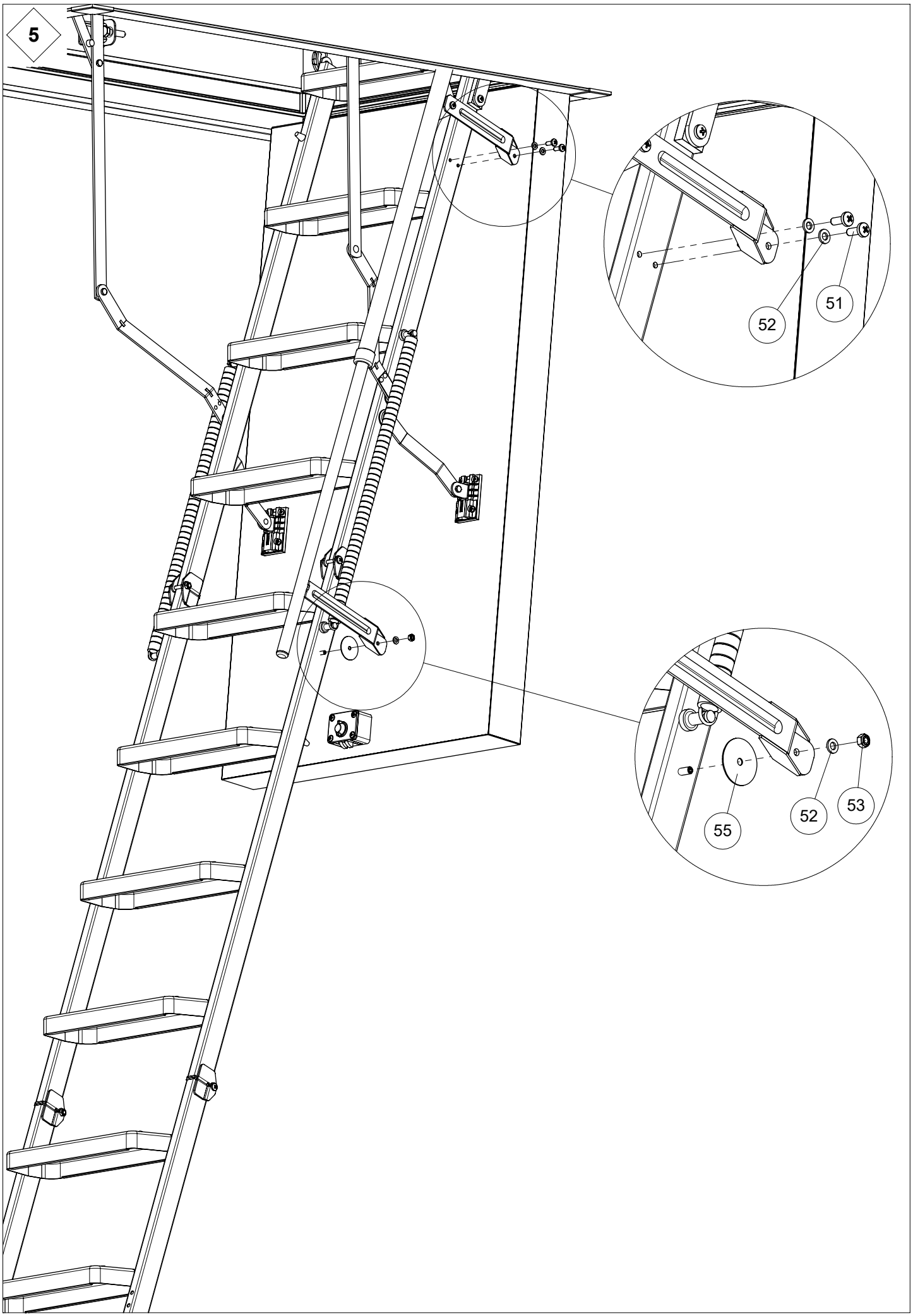
5
52
51
55
52
53

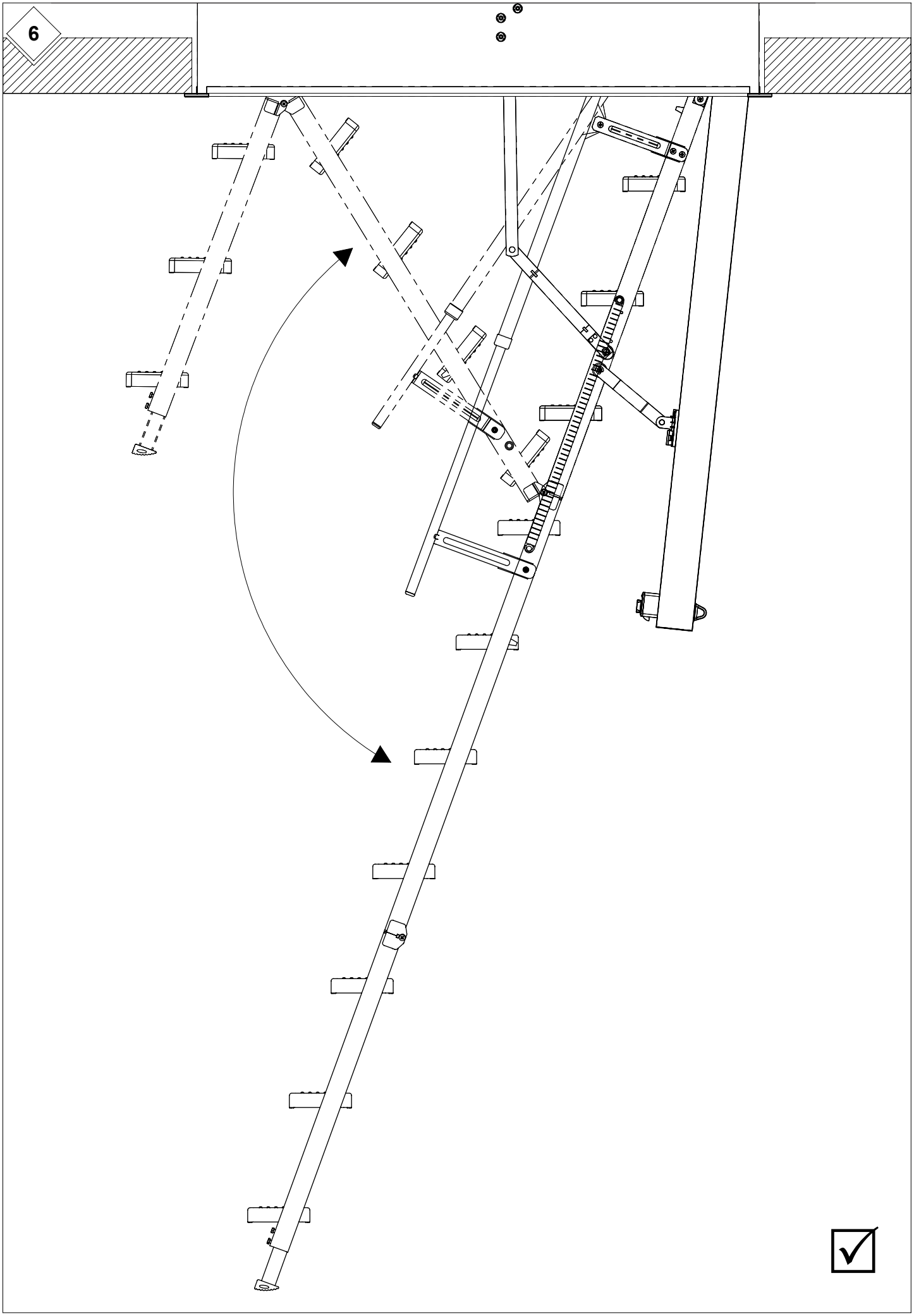
6

10

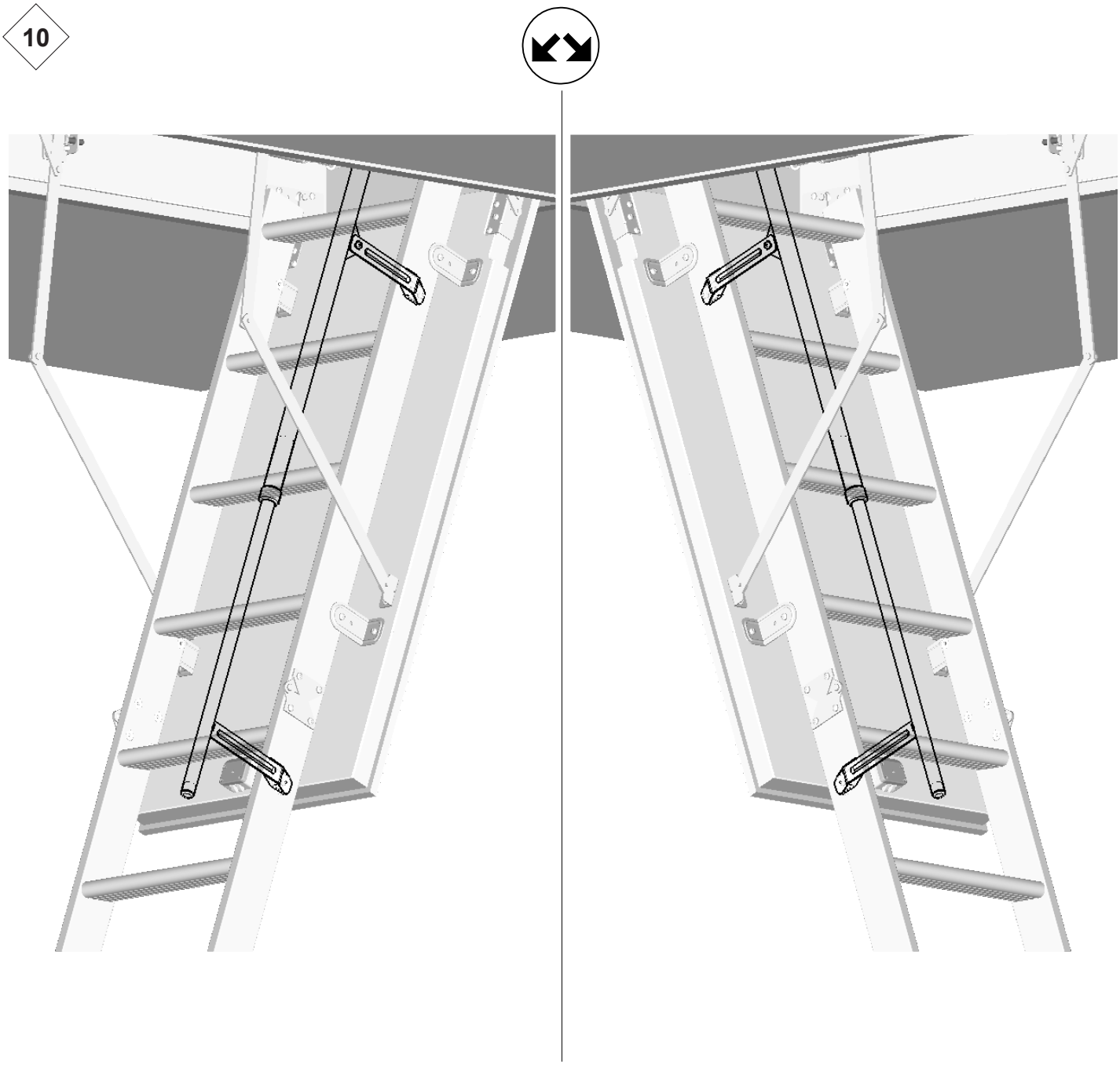

11

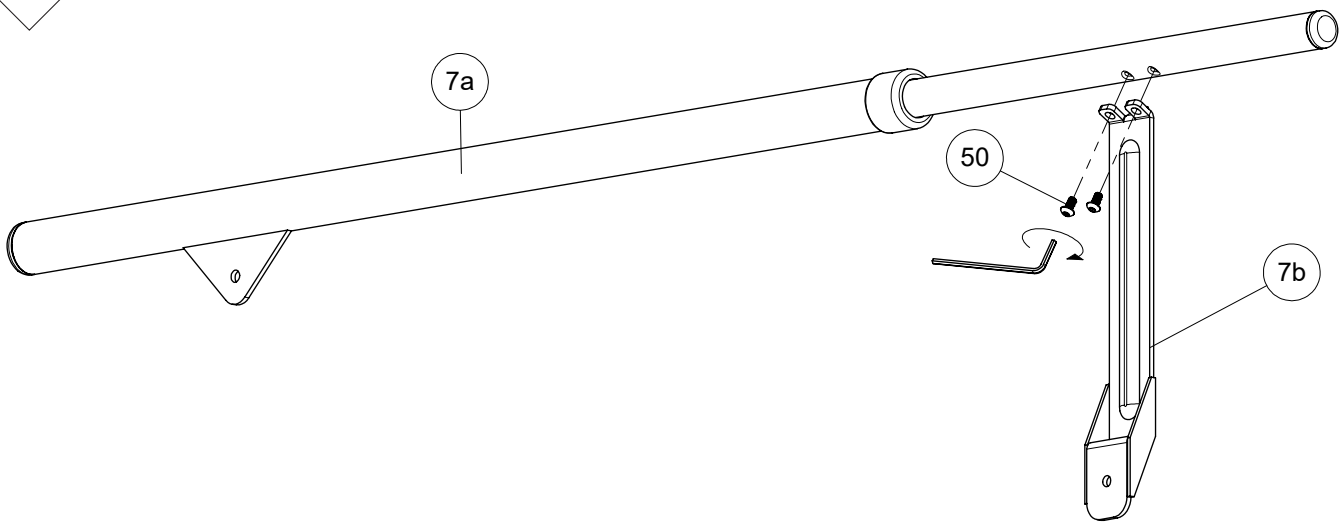

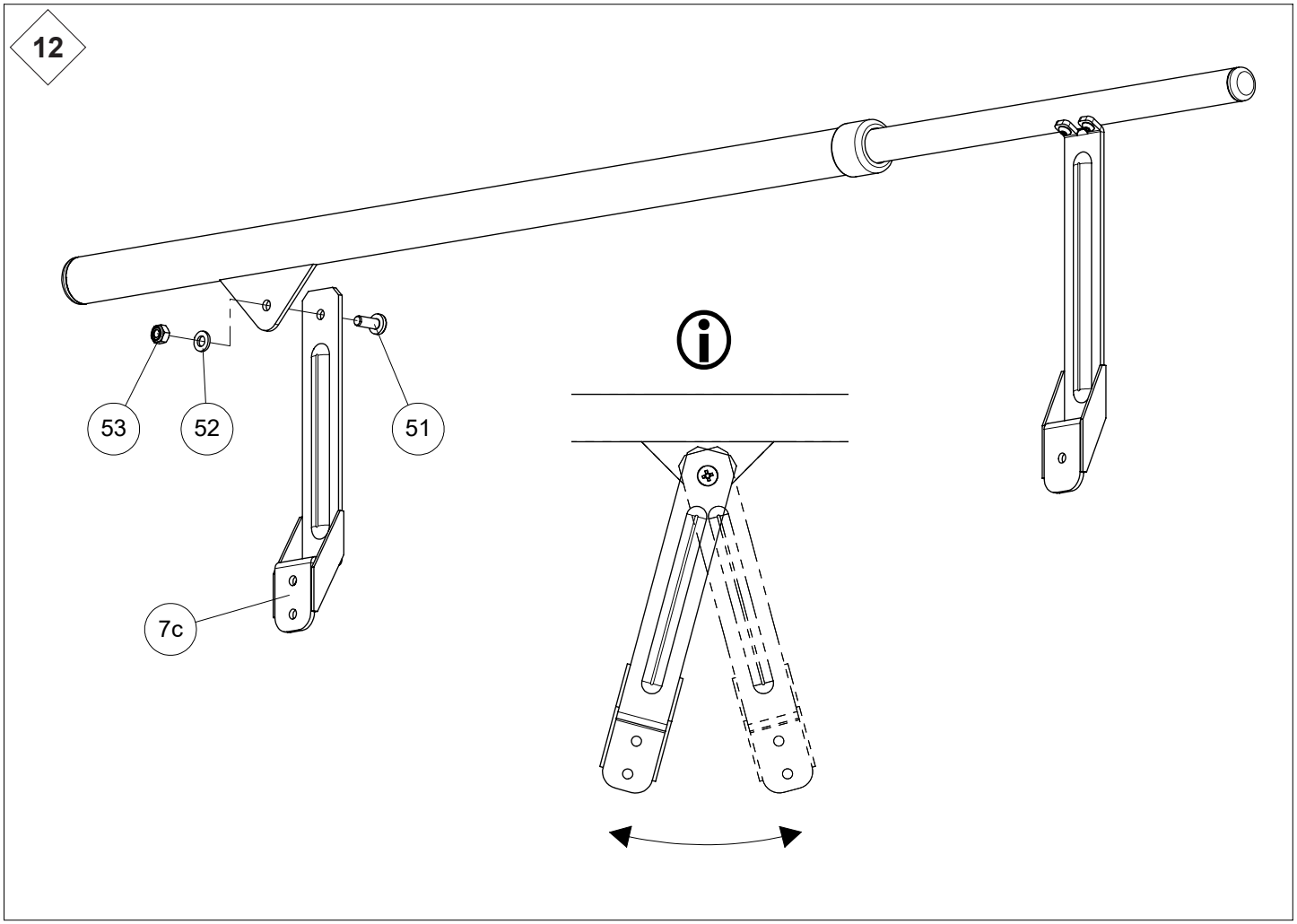
12
53
52
51
7c

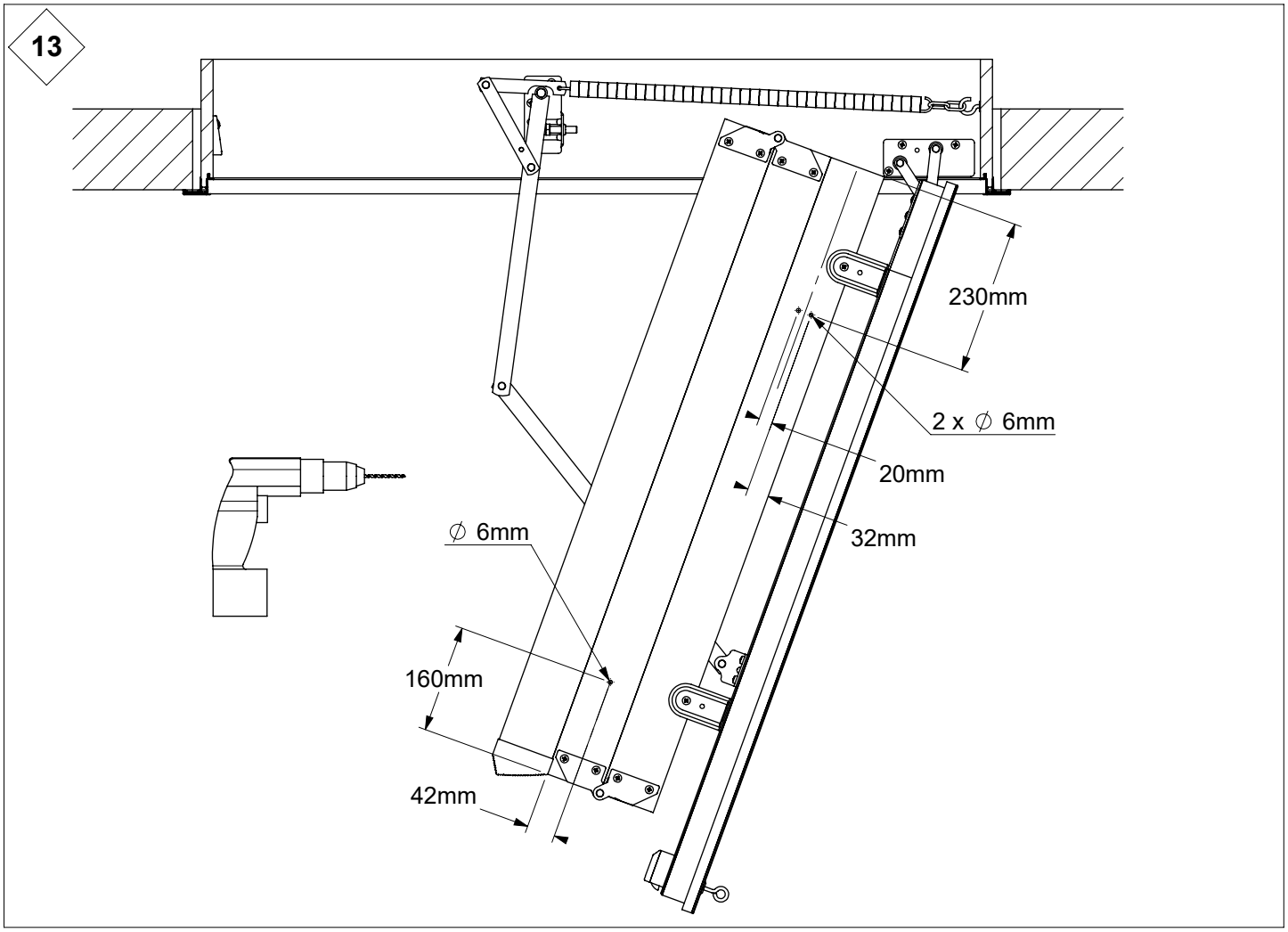
13
230mm
2 x ∅ 6mm
20mm
32mm
∅ 6mm
160mm
42mm

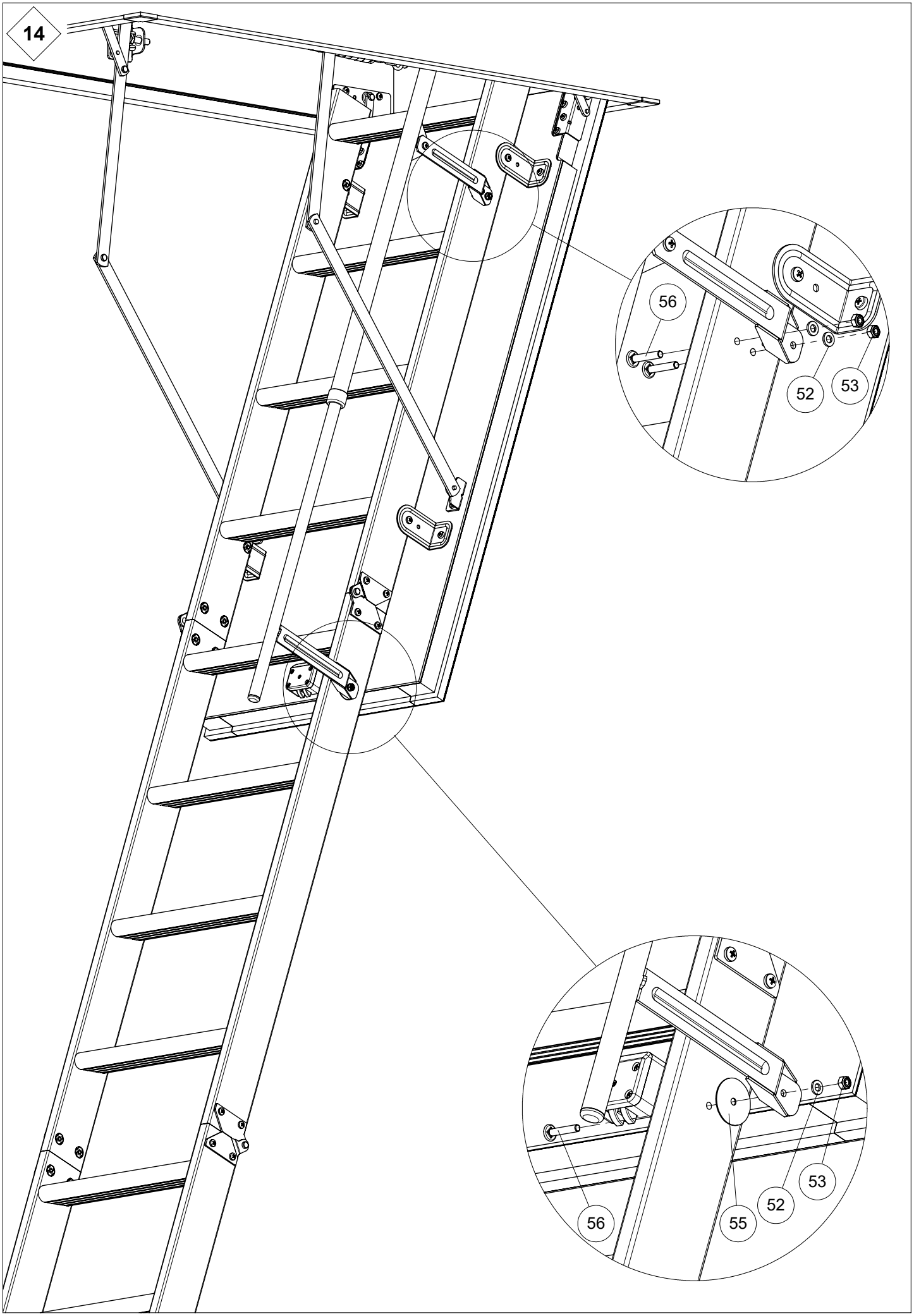
14
56
52
53
56
55
52
53
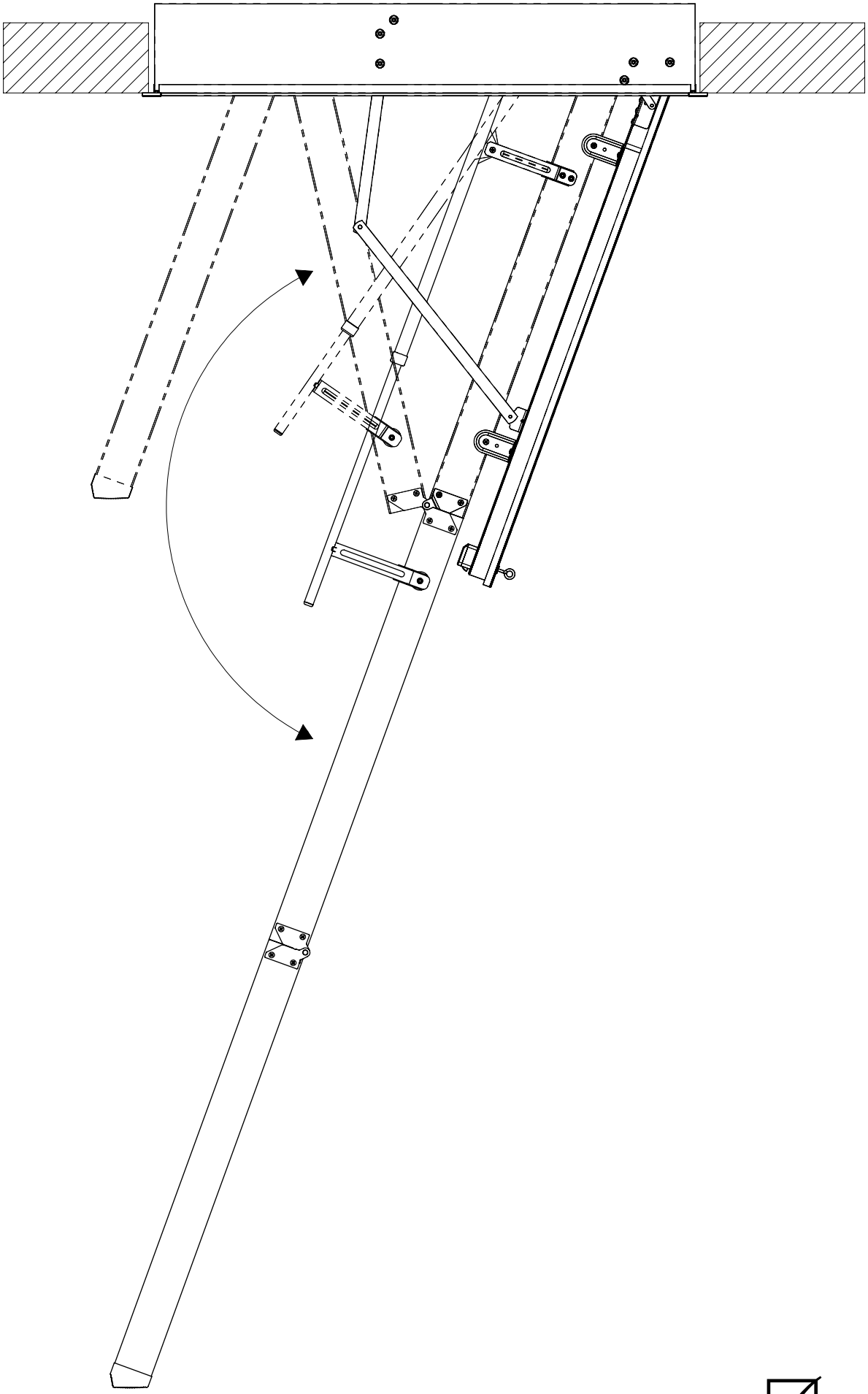
15