PARIS

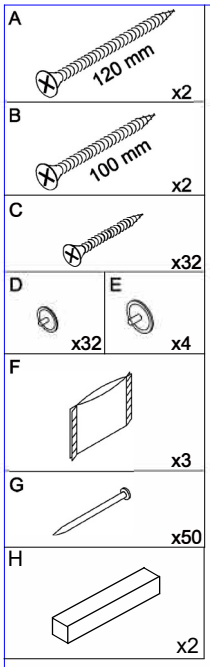

	A	B
14	262,0 - 280,5 cm	261,5 cm
13	243,0 - 262,0 cm	243,5 cm
12	224,5 - 243,0 cm	225,5 cm
11	206,0 - 224,5 cm	207,5 cm
10	187,5 - 206,0 cm	189,5 cm

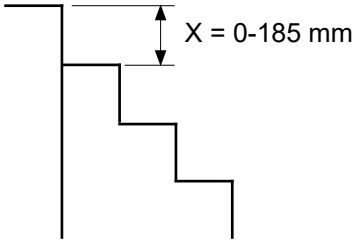

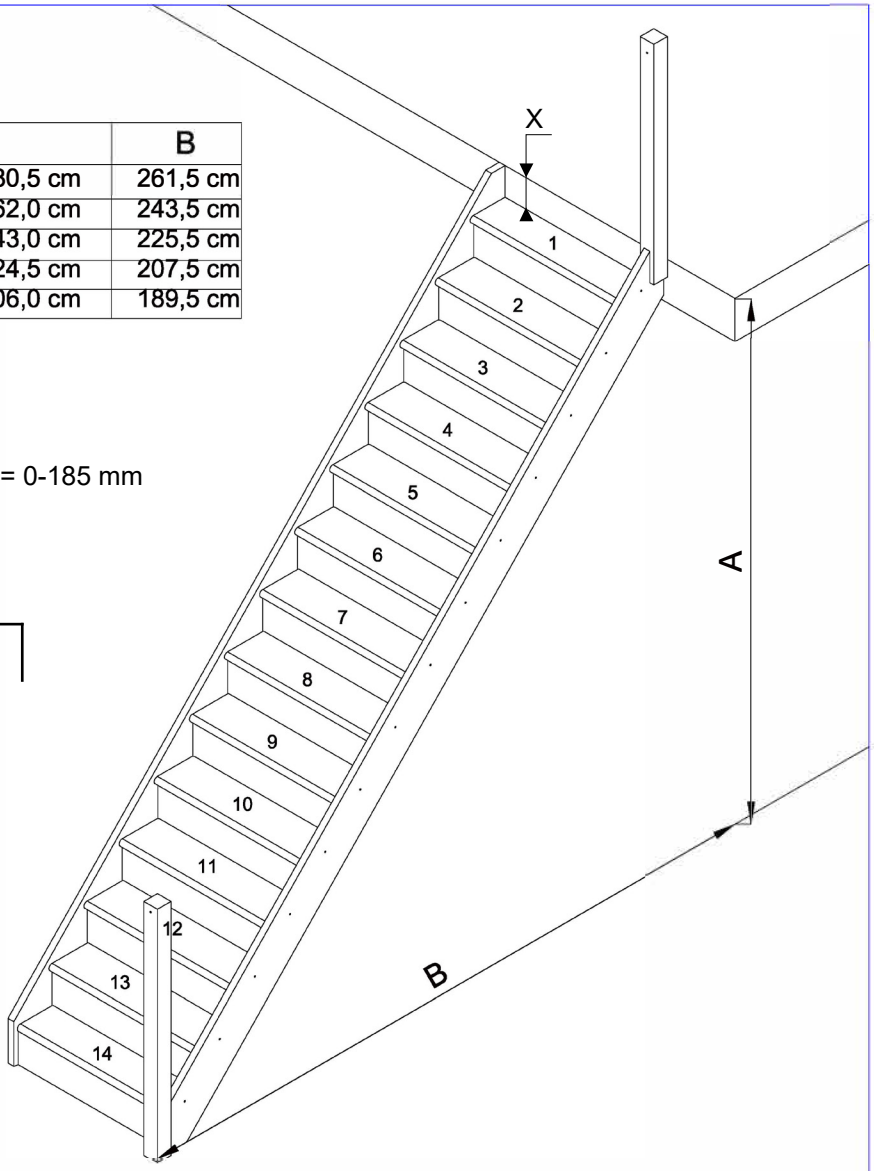

1

2

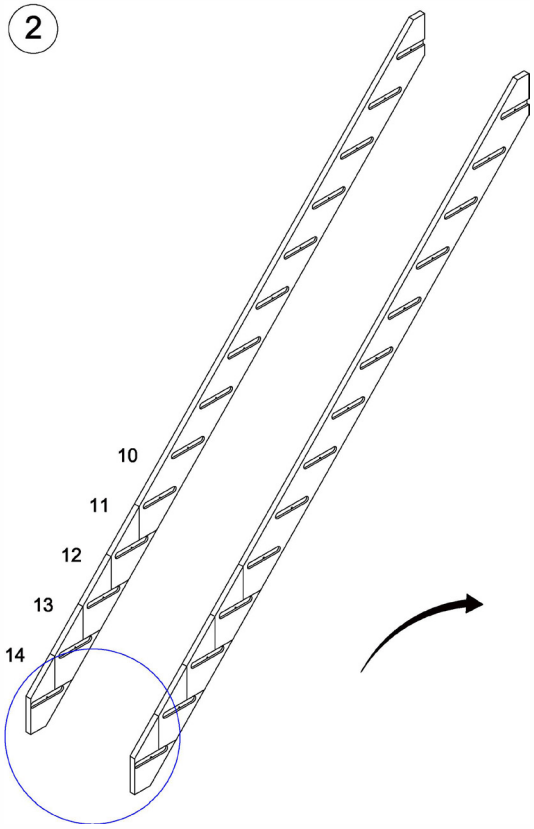

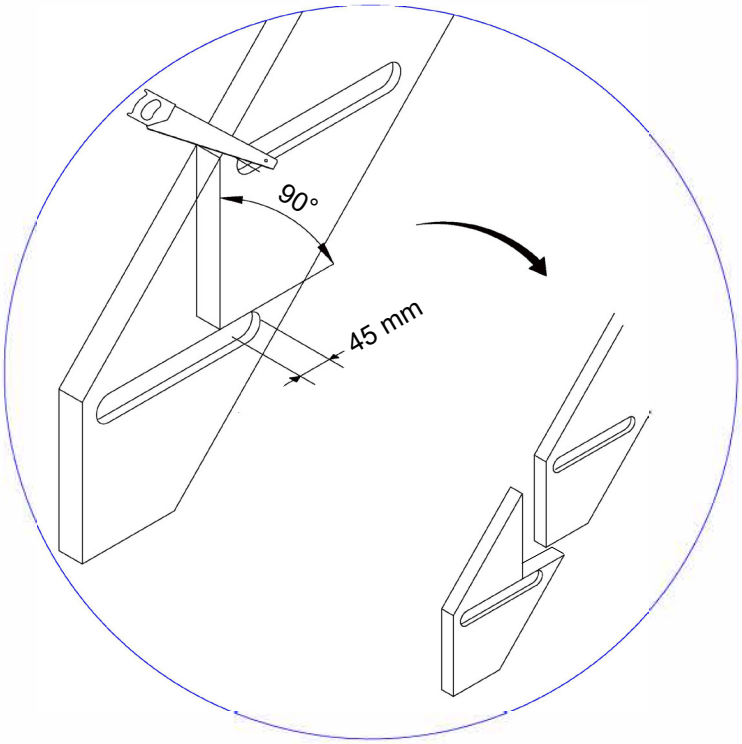

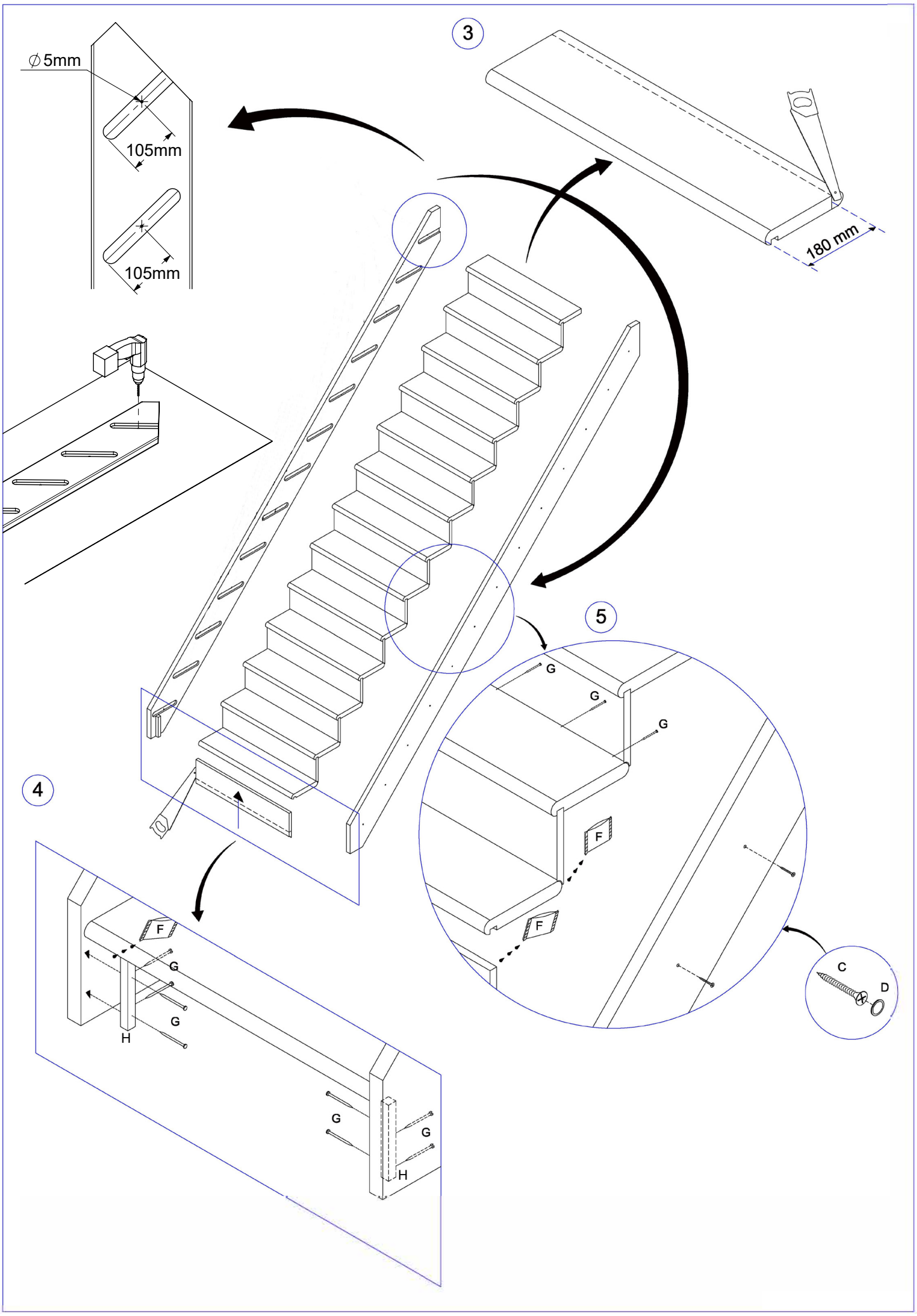
3
∅5mm
105mm
105mm
180 mm
5
G
G
G
F
F
C
D
4
F
G
G
H
G
G
H

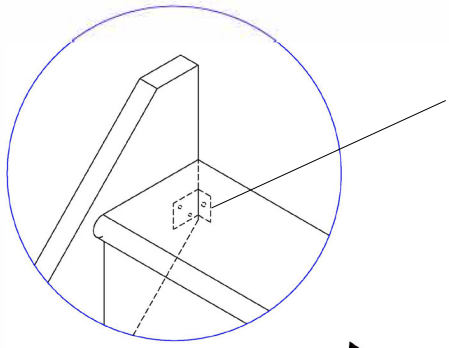

Medfølger ikke
Not included
Nicht enthalten
Non inclus
No incluido

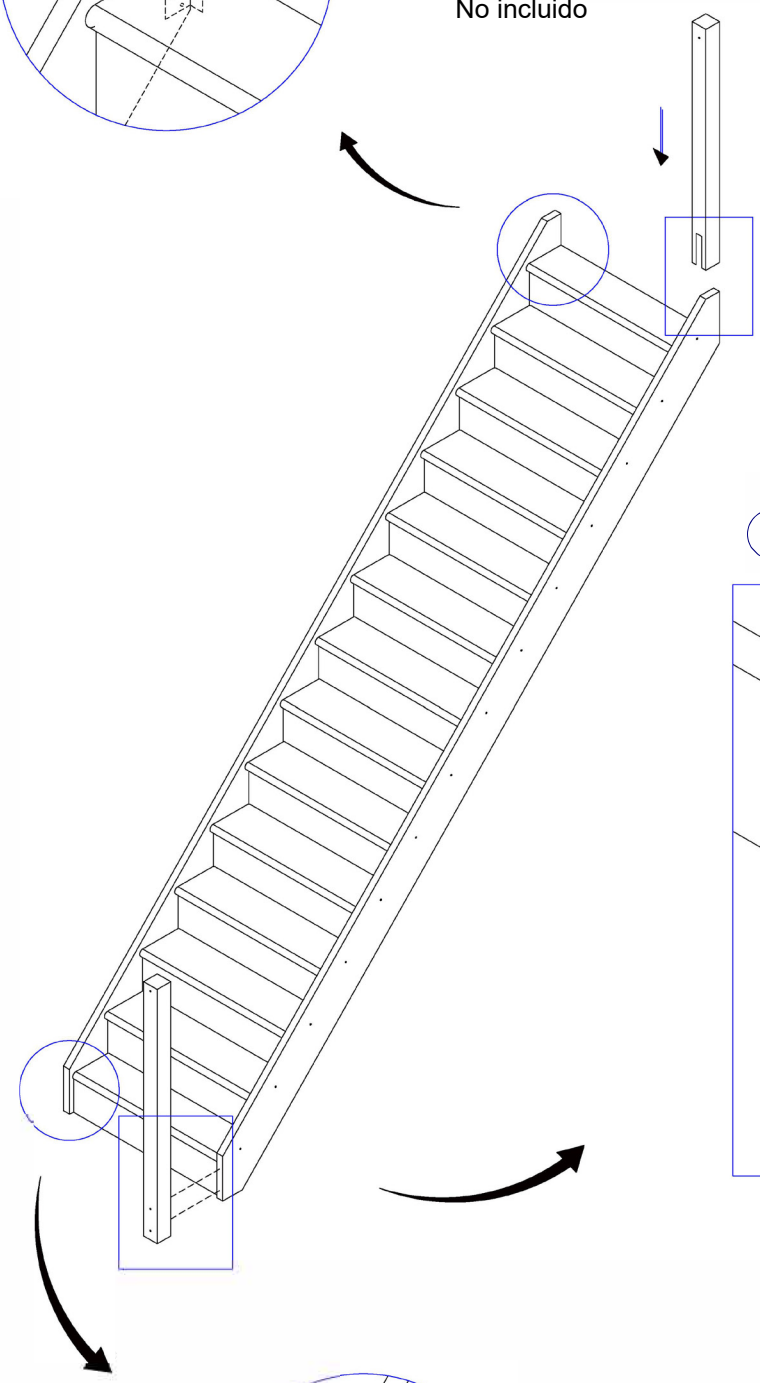

6

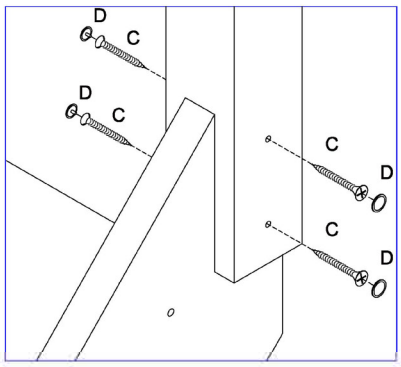

7

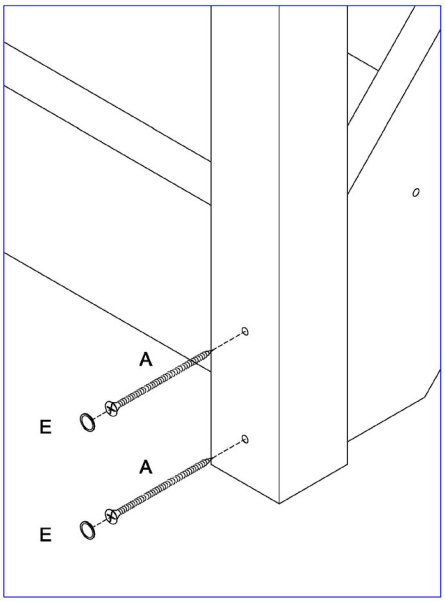

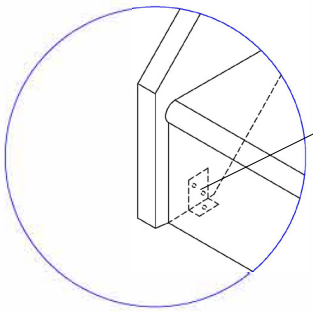

Medfølger ikke
Not included
Nicht enthalten
Non inclus
No incluido